ITEM	NUMBER	DESCRIPTION	QTY.
1	03-242044	CAP PLUG PBH-2000	1
2	06-400040-1	WASH JET 0004	1
3	06-415040-1	WASH JET 1504	1
4	06-425040-1	WASH JET 2504	1
5	06-440040-1	WASH JET 4004	1
6	DSE-5400	DRIVE ASS'Y, 30" PRESSURE MOWER	1
7	ESE-5400-1	HANDLE AND GUN ASS'Y PM30-HR	1
8	ESE-5401	DECK ASS'Y, PM30	1
9	ESE-5402	REEL ASS'Y K01-5000 W/25' HOSE	1

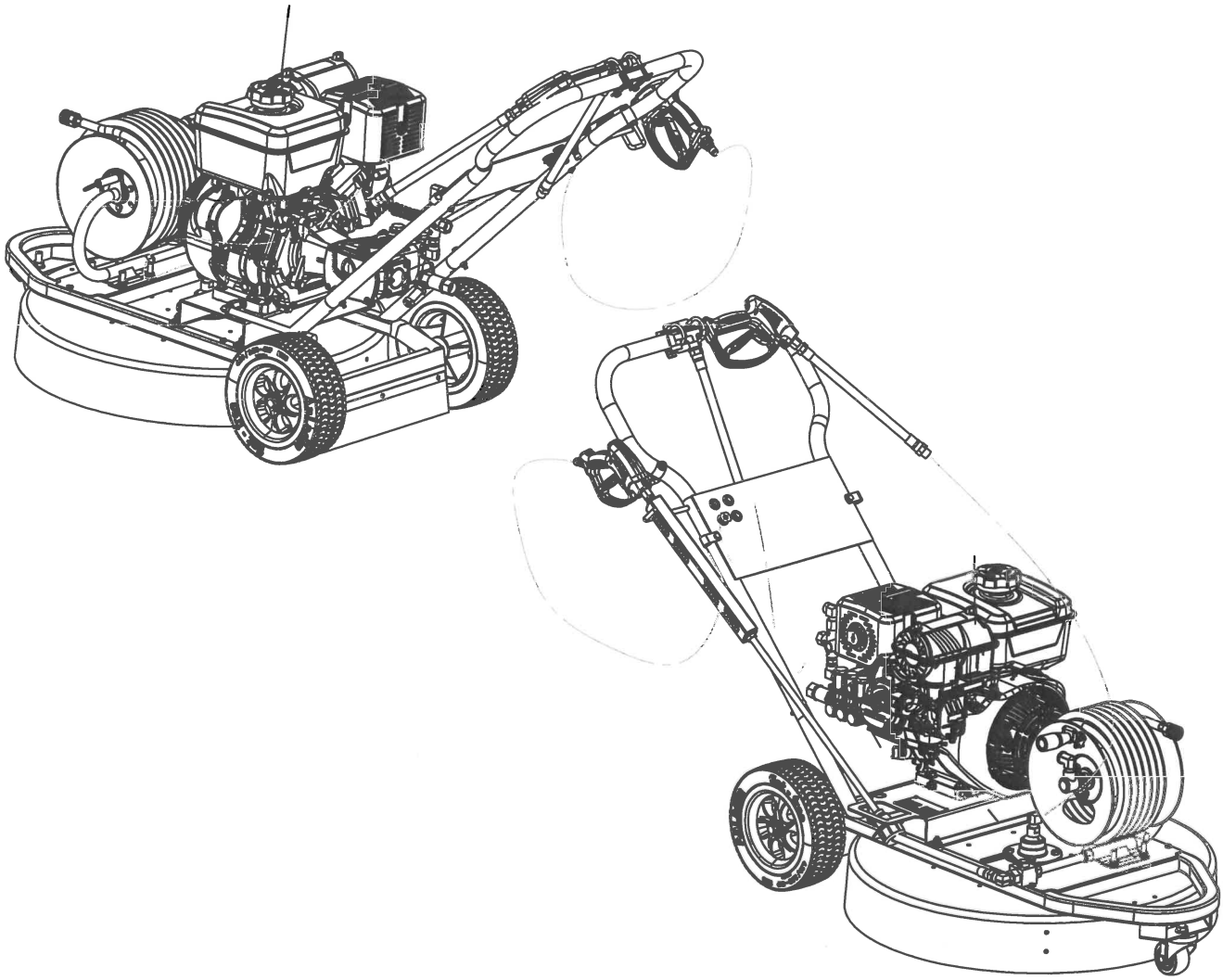

REV.	DESCRIPTION	ECR/ECN	DATE	BY
C	SHOWING CHANGES FROM PROTOTYPE BUILD		1/13/2023	BH
B	SHOWING OFFSET HOSE REEL AND BALL VALVE		12/14/2022	BH
A	DSE-5400-1 WAS DSE-5400		12/7/2022	BH

REVISIONS

DRAWN BY: BH

DATE: 11/22/2022

DESCRIPTION: PM30-14-HR

DESCRIPTION 2: PRESSURE MOWER

DRAW #: ASE-0038-1

SHEET 1 OF 1

ITEM	NUMBER	DESCRIPTION	QTY.
1	01-131204	ELBOW, ST. 3/8" X 90* HD	2
2	01-271104	NIPPLE, HD, 3/8" X 1 1/2" ZINC	1
3	01-411101	HOSE BARB 1/4" x 3/8"	1
4	01-411112-1	DAPCO/DEXTER BARB GROMMET	4
5	01-411400	HOSE BARB, 3/8" X 3/8"	1
6	01-451006	CLAMP: OETIKER	2
7	02-121400	CAPSCW 5/16-18 x 1.5 ZINC	4
8	02-131200	CAP SCREW: 3/8"-16 x 1"	4
9	02-301230	HEXNUT: NYLK 5/16-18 ZINC	4
10	02-501200	WASHER, 5/16" FLAT, ZINC	4
11	02-511301	WASHER, LOCK PLATED 3/8"	4

ITEM	NUMBER	DESCRIPTION	QTY.
12	02-522200	POP RIVET	4
13	02-531005	CABLE TIE, RAP TIGHT, 5"	1
14	05-112400	145' THERMO RELIEF VALVE	1
15	05-121701	INLET FILTER 1/2"	1
16	05-187600	UNLOADER: AR VRT3-250A	1
17	08-176100	PUMP	1
18	09-504100	ENGINE: 14HP VANGUARD	1
19	2204-16	HOSE: 3/8" MULTI PURPOSE	1
20	26-101005	NAME PLATE PRIVATE LABEL	1
21	BSE-5401	DRIVE PLATE, PM30-14	1
22	K04-4001	OIL DRAIN KIT, 14HP VANGUARD	1

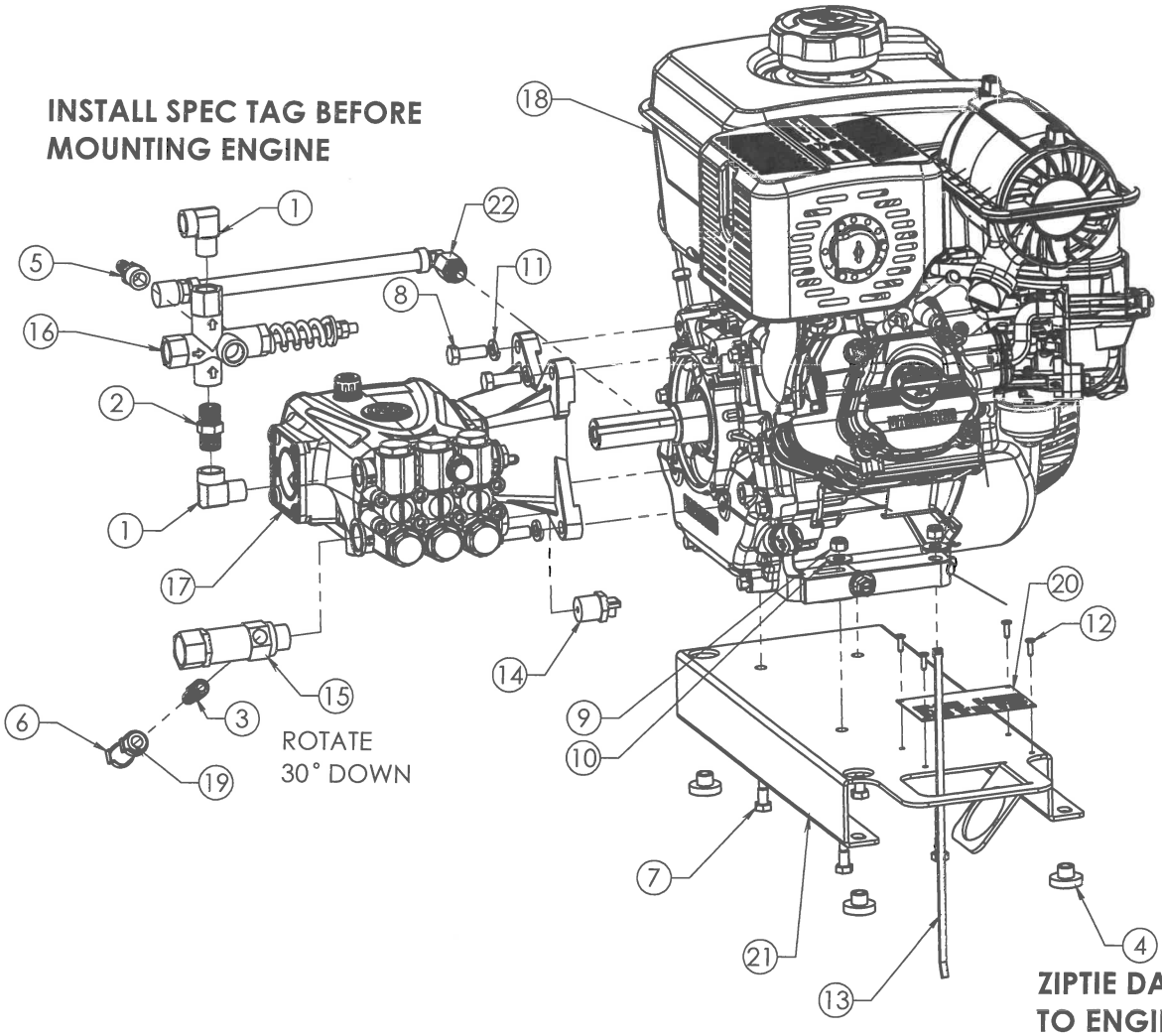

REV.	DESCRIPTION	ECR/ECN	DATE	BY
E	2204-16 WAS 2204-10; REMOVED 02-301230 & 02-501200 @4 EA.; ADDED ZIPTIE		3/17/2023	BH
D	RECONFIGURED UNLOADER; ADDED OIL DRAIN KIT		1/5/2023	BH
C	REMOVED ADJUSTMENT KNOB AND NOTE; ADDED SPEC TAG AND NOTE		12/29/2022	BH
B	REMOVED NOTE TO REMOVE CONFUSION		12/7/2022	BH
A	ADDED STREET ELBOW AND ORIENTATION NOTES		12/1/2022	BH

REVISIONS

DRAWN BY: BH

DATE: 11/22/2022

DESCRIPTION: DRIVE ASS'Y, 30" PRESSURE MOWER

DESCRIPTION 2:

DRAW #: DSE-5400

SHEET 1 OF 1

ITEM	NUMBER	DESCRIPTION	QTY.
1	01-241203	CAP, HEX 3/8" STEEL	1
2	01-411103	HOSE BARB, 1/4 X 3/8 X 90	1
3	01-411400	HOSE BARB, 3/8" X 3/8"	1
4	01-412510	ADAPTER METRIC MALE NPT FEMALE	1
5	01-451006	CLAMP: OETIKER	2
6	2203-8P5	BULK ITEM 3/8" FUEL LINE	1

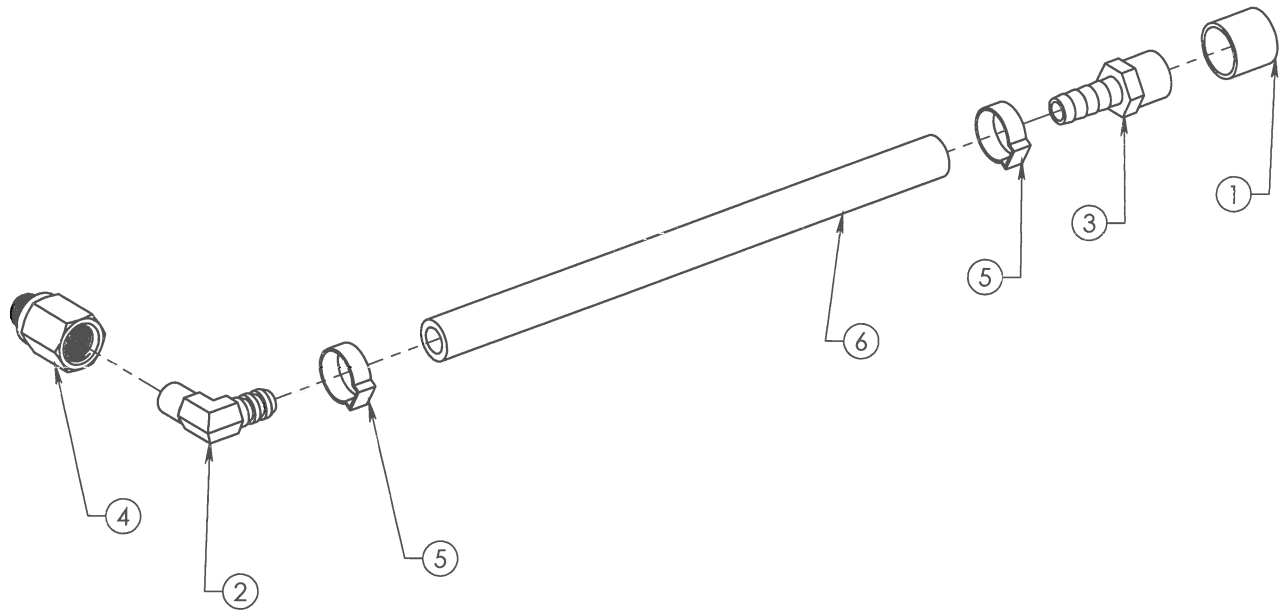

REV.	DESCRIPTION	ECR/ECN	DATE	BY
B	01-411400 WAS 01-411200		2/6/2023	BH
A	01-411200, 01-411103, & 2203-8P5 WERE 01-411101, 01-411101, & 2203-6P5		1/20/2023	BH

REVISIONS

DRAWN BY: BH

DATE: 01/13/2023

DESCRIPTION: OIL DRAIN KIT, 14HP VANGUARD

DESCRIPTION 2:

DRAW #: K04-4001

SHEET 1 OF 1

ITEM	NUMBER	DESCRIPTION	QTY.
1	01-111204	ELBOW: 3/8 x 90 DEG SCH80	1
2	01-161215	TEE 3/8" PLATED MALE BRANCH NPT	1
3	01-421310	QUICK COUPLER, NIPPLE, 3/8" W/MALE THREADS	1
4	02-111500	CAPSCREW: 1/4-20 X 1 3/4 ZINC PLATED	4
5	02-201120	J- BOLT 5/16"	1
6	02-201203	U-BOLT, 1 3/4 X 2 3/4 X 1/4-20	2
7	02-301130	NUT, HEX: NYLK 1/4"-20 ZINC	4

ITEM	NUMBER	DESCRIPTION	QTY.
8	02-301200	5/16-18 ZINC SERRATED NUT	2
9	03-191230	CLAMP #COV-1113Z1	2
10	03-241000	GROMMET (FOR WASH JETS)	4
11	06-152510	TRIGGER GUN 10GPM 5000PSI AALADIN	1
12	BF-0029	HOSE 3/8" X 58" 4000PSI 3/8" SLD/SWL	1
13	BF-0050	HOSE 3/8" X 30" 4000PSI 3/8" SLD/SWL	1
14	BLK-0010-9	HANDLE WELD'T PM30	1
15	E01-0370	GUN/LANCE ASSY	1

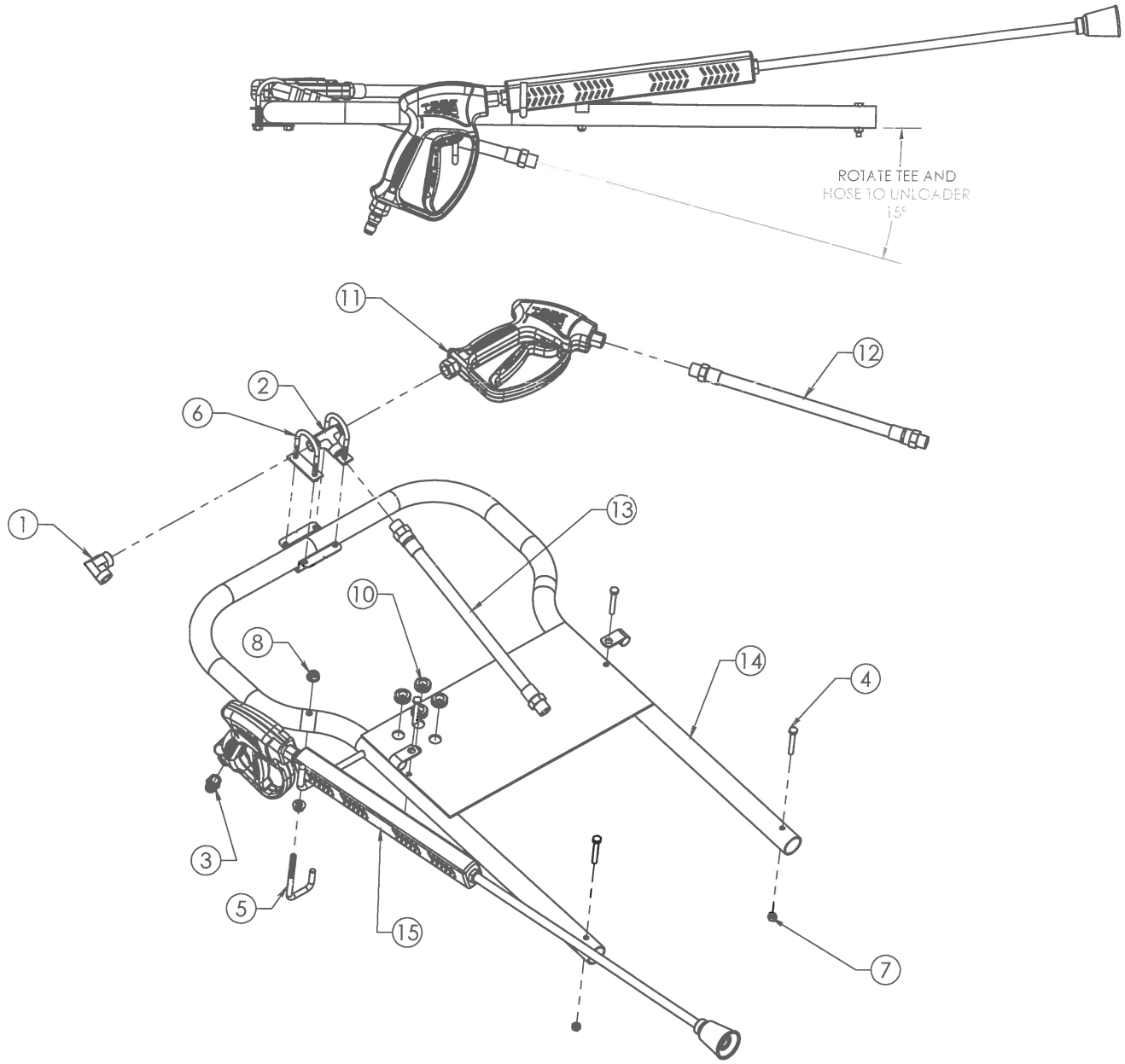

REV.	DESCRIPTION	ECR/ECN	DATE	BY
B	CORRECTED PLUMBING FITTINGS: ADDED J-BOLT		3/1/2023	BH
A	BF-0050 WAS BF-0049; SHOWING SPLIT HANDLE; REMOVED BSE-5316-1 @1; ADDED 03-191230 @2		12/30/2022	BH

REVISIONS

DRAWN BY: BH

DATE: 12/1/2022

DESCRIPTION: HANDLE AND GUN ASS'Y PM30-HR

DESCRIPTION 2:

DRAW #: ESE-5400-1

SHEET 1 OF 1

BOM Table

ITEM	NUMBER	DESCRIPTION	QTY.
1	01-421000	QUICK COUPLER, 1/4" FNPT	1
2	06-152510	TRIGGER GUN 10GPM 5000PSI AALADIN	1
3	06-201300	SINGLE LANCE 1/4" X 36"	1

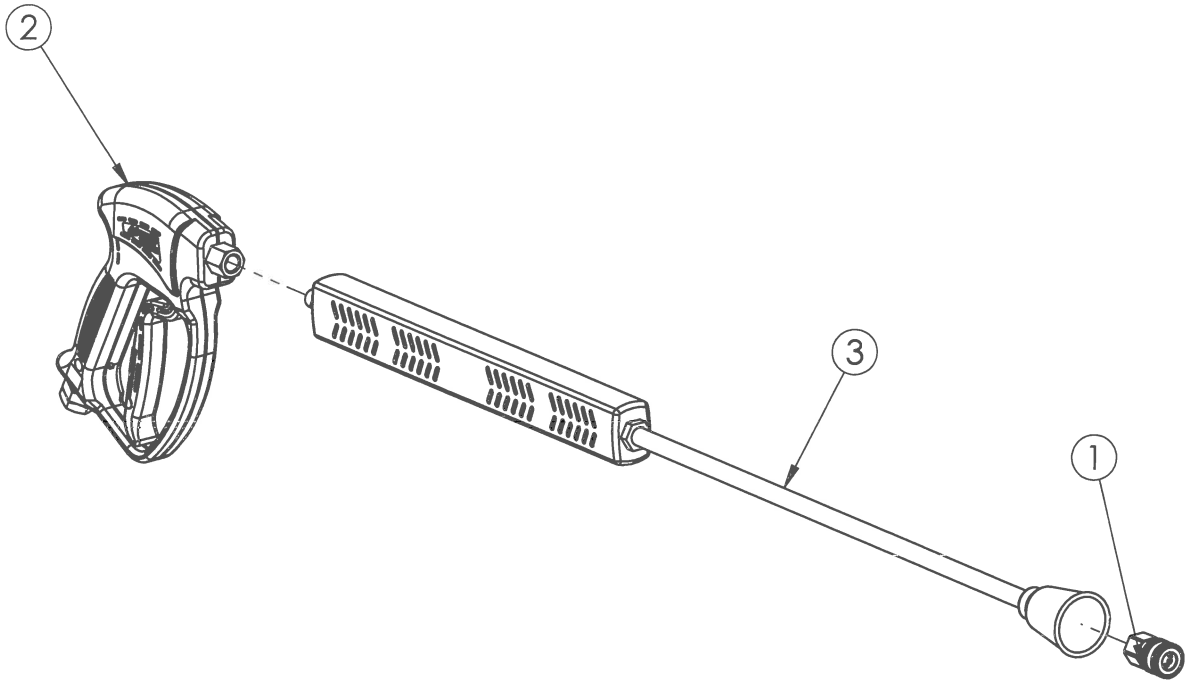

REV.	DESCRIPTION	ECR/ECN	DATE	BY
A	SHOWING UPDATED TRIGGER GUN		2/14/2023	BH

REVISIONS

DRAWN BY: BH

DATE: 10/31/2011

DESCRIPTION: GUN/LANCE ASSY

DESCRIPTION 2:

DRAW #: E01-0370

SHEET 1 OF 1

ITEM	NUMBER	DESCRIPTION	QTY.
1	01-131204	ELBOW, ST. 3/8" X 90* HD	1
2	01-171608_	TALON 4 SWIVEL	1
3	02-111500	CAPSCREW: 1/4-20 X 1 3/4 ZINC PLATED	4
4	02-131200	CAP SCREW: 3/8"-16 x 1"	4
5	02-301130	NUT, HEX: NYLK 1/4"-20 ZINC	4
6	02-301230	HEXNUT: NYLK 5/16-18 ZINC	4
7	02-301331	HEX NUT - NYLK 3/8-16	4
8	02-301400	NUT, 1/2", SERRATED WHIZLOCK	1
9	02-501100	WASHER: 1/4", FLAT, ZINC	4
10	02-501200	WASHER, 5/16" FLAT, ZINC	4

ITEM	NUMBER	DESCRIPTION	QTY.
11	02-501300	WASHER: 3/8" FLAT, ZINC	4
12	02-503001	WASHER, 1/2" X 2", EXTRA THICK	1
13	02-521203	PUSH CAP NUT 3/4" - AXLE CAP	2
14	02-522200	POP RIVET	3
15	06-100420	WASH JET #2502 1/4" MEG	2
16	12-101200	CASTER	1
17	12-152000	TIRE/WHEEL 10" X 3.5" X 4" FLAT FREE/CHROME	2
18	23-101500	SPINNER DECK	1
19	BSE-0057	24" EDGE STRIP	1
20	BSE-0088	PLASTIC BLADE	1
21	BSE-6246-8	FRAME WELD'T, 30" PRESSURE MOWER	1
22	ENH-0006	SPINNER PART 30" TALON, 4 3/4" DECK	1

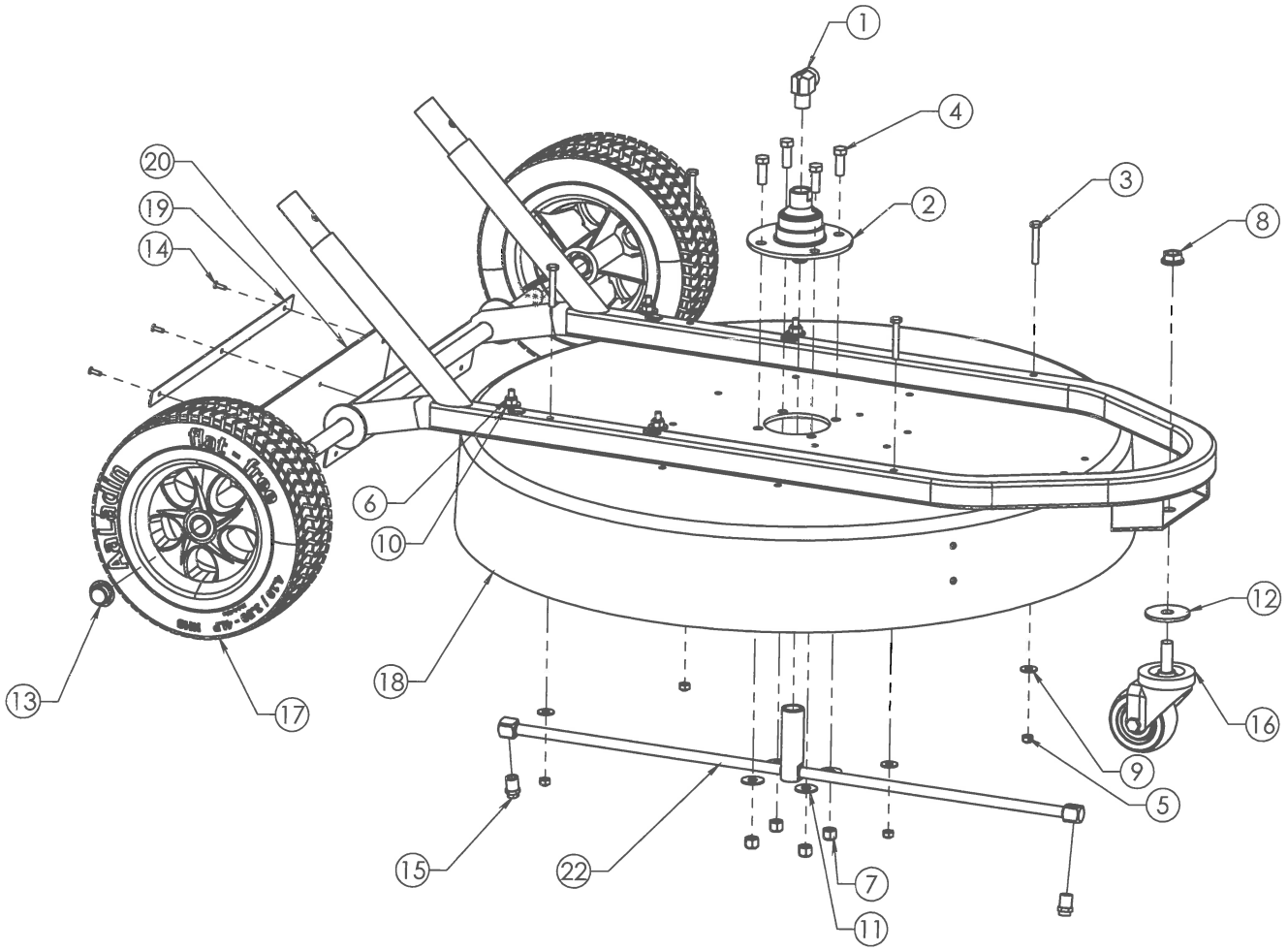

REV.	DESCRIPTION	ECR/ECN	DATE	BY
C	ADDED 02-503001 PER CUSTOMER REQUEST		3/28/2023	BH
B	ADDED HARDWARE TO MOUNT DRIVE ASSEMBLY		3/20/2023	BH
A	06-100420 WAS 06-100510; CHANGED PER CUSTOMER REQUEST		3/17/2023	BH

REVISIONS

DRAWN BY: BH

DATE: 11/22/2022

DESCRIPTION: DECK ASS'Y, PM30

DESCRIPTION 2:

DRAW #: ESE-5401

SHEET 1 OF 1

ITEM	NUMBER	DESCRIPTION	QTY.
1	01-131204	ELBOW, ST. 3/8" X 90* HD	1
2	01-272004	NIPPLE, 3/8" X 6" SCH80	1
3	01-421210	QUICK COUPLER, 3/8" FNPT	1
4	05-201130	HIGH PRESSURE BALL VALVE - 6000 PSI	1
5	11-112525	HOSE 3/8" X 25' BLK 4000PSI GENERIC	1
6	BF-0034	HOSE 3/8" X 64" 4000PSI 3/8" SLD/SWL	1
7	BSE-5402	HOSE REEL MOUNTING PLATE	1
8	K01-5000	HOSE REEL	1

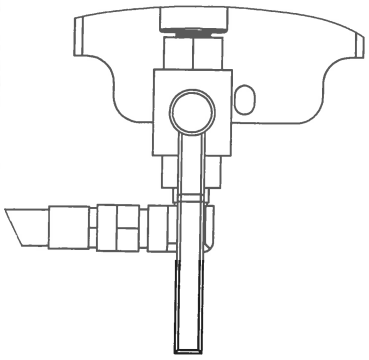

VALVE OPEN: WATER SUPPLIED TO HOSE REEL FOR OPERATION OF PRESSURE WASHER

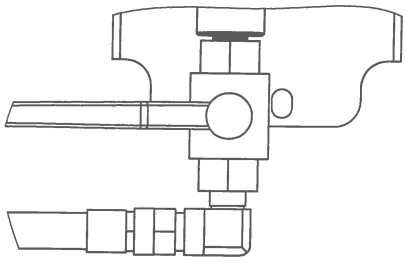

VALVE CLOSED: NO SUPPLY TO HOSE REEL - FOR OPERATION OF SURFACE CLEANER

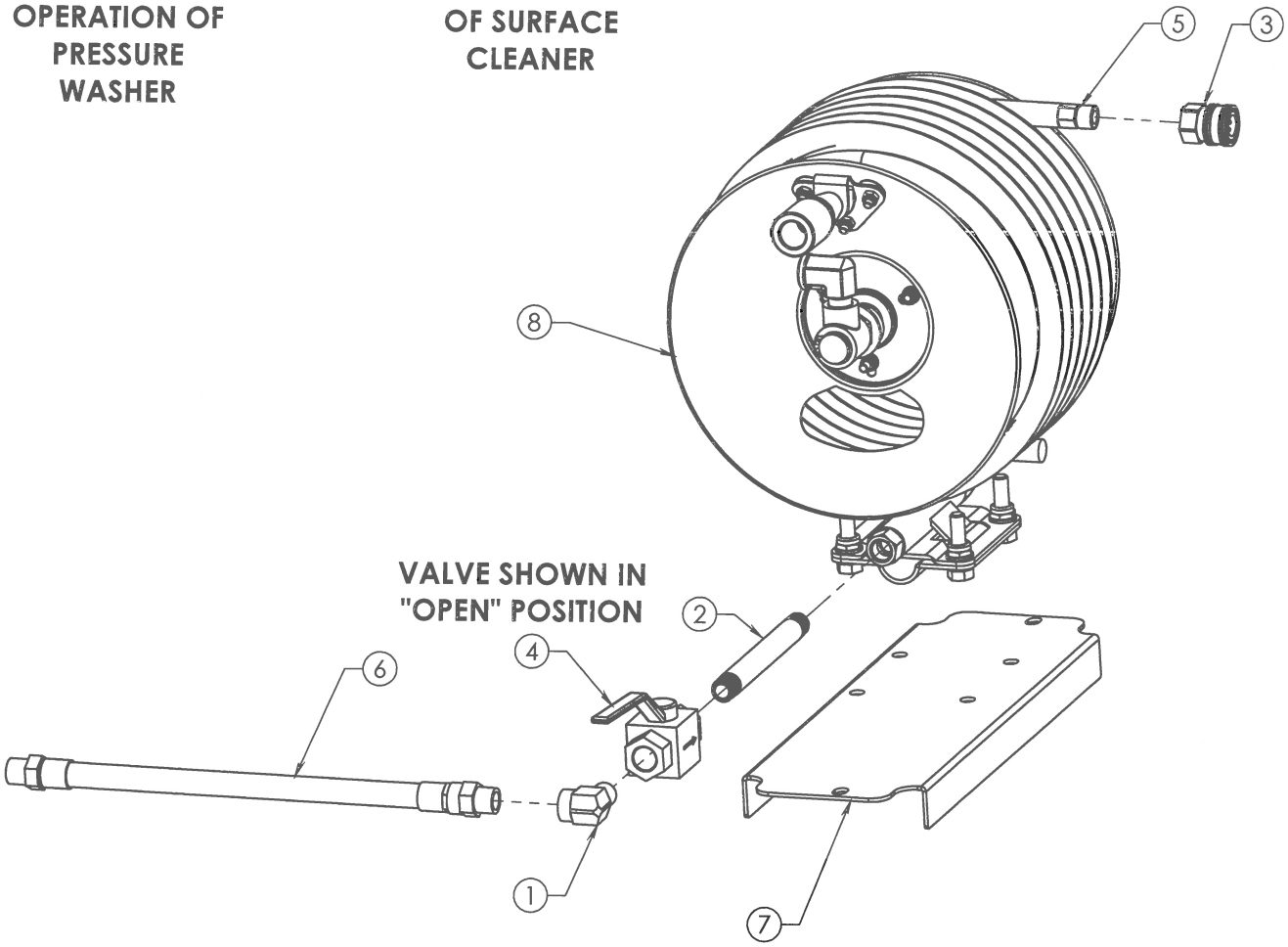

VALVE SHOWN IN "OPEN" POSITION

REV.	DESCRIPTION	ECR/ECN	DATE	BY
C	ADDED BALL VALVE ON/OFF DETAILS		5/3/2023	BH
B	01-272004 & BF-0050 WERE 01-271604 & BF-0050; SHOWING UPDATED BASE PLATE		1/12/2023	BH
A	ADDED BALL VALVE FOR SWITCHING BETWEEN SPINNER AND GUN		12/14/2022	BH

REVISIONS

DRAWN BY: BH

DATE: 12/1/2022

DESCRIPTION: REEL ASS'Y K01-5000 W/25' HOSE

DESCRIPTION 2:

DRAW #: ESE-5402